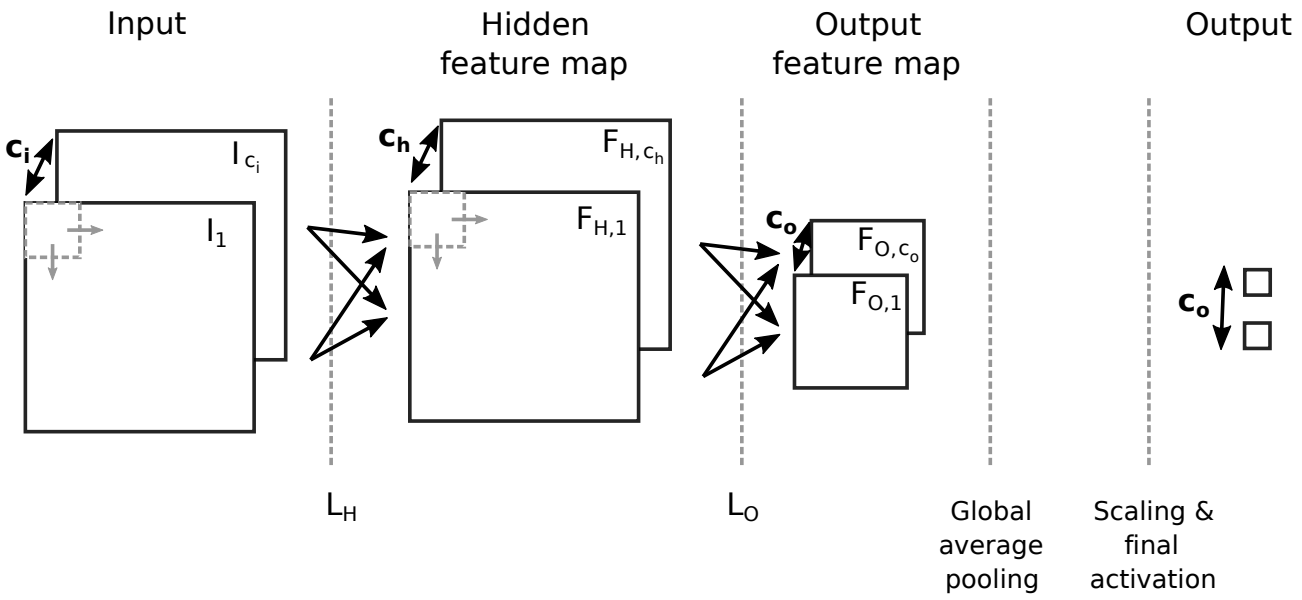
Input
Hidden feature map
Output feature map
Output
c_i
I_{c_i}
I_1
c_h
F_{H,c_h}
$F_{H,1}$
c_o
F_{O,c_o}
$F_{O,1}$
c_o
L_H
L_O
Global average pooling
Scaling & final activation